DIVISION STREET

Replacement with Temporary Structure

Andrea M. Lacasse, PE
Brian Brenner, PE
Daniel S. Holmes, PE, LEED AP

Tighe&Bond

DEAD LOAD COMPARISON:

Dead Loads Transferred to Abutment

Existing Bridge

Bridge Geometry and Loads [from Original Drawings]

Dead Load in L_oU_1 =	-177 kip	[UNITS?]				
Rise of Member=	252 in					
Run of member=	207 in					
Length of Member=	326.12 in					
Vert component=	-273.55 kip	=	-(177 kip*	(252 in/	326.12 in)*	2 trusses

Proposed Structure

					% of Original Load
30' curb-to-curb					
From Acrow, bridge weigths 182 Tons= 364 Kips					
Simply Supported Bridge, Divide by 2 abutments=	-182 kip	=	-364 kip/	2	66.53%
24' curb-to-curb					
From Acrow, bridge weigths 162 Tons= 324 Kips					
Simply Supported Bridge, Divide by 2 abutments=	-162 kip	=	-324 kip/	2	59.22%
13.6' curb-to-curb					
From Acrow, bridge weigths 162 Tons= 324 Kips					
Simply Supported Bridge, Divide by 2 abutments=	-109 kip	=	-218 kip/	2	39.85%

LIVE LOAD COMPARISON:

Summary

Max Load to Abutments:

The static effects of the design truck or tandem shall be increased by a percentage for dynamic load allowance. This increased percentage is 33%, expressed as a multiplier of 1.33 in the equation below.

Live Load Shear	-67.2 kip	=	MIN:	-67.20 kip	OR	-49.29 kip
Lane Load Shear	-44.8 kip					
Sidewalk Shear	-26.25 kip					

Recall Multiple Presence Factor= 1.20

Recall Impact Factor= 1.33

Maximum Shear -192.5112 kip = 1.20* [-44.8 kip+ -26.25 kip+ 1.33* -67.2 kip]

Proposed Bridge Applies Higher Load than Existing

Percent of Original Live Load

136.89% = -192.51 kip/ -140.64 kip* 100

Percent of Total Load

72.80% = -301.5112 kip/ -(273.55 kip+ -140.64 kip)* 100

PROPOSED LIVE LOAD EXCEEDS EXISTING

PROPOSED DEAD AND LIVE LOAD DOES NOT EXCEED EXISTING

EXISTING DEAD AND LIVE LOAD

PRELIMINARY ABUTMENT LAYOUT:

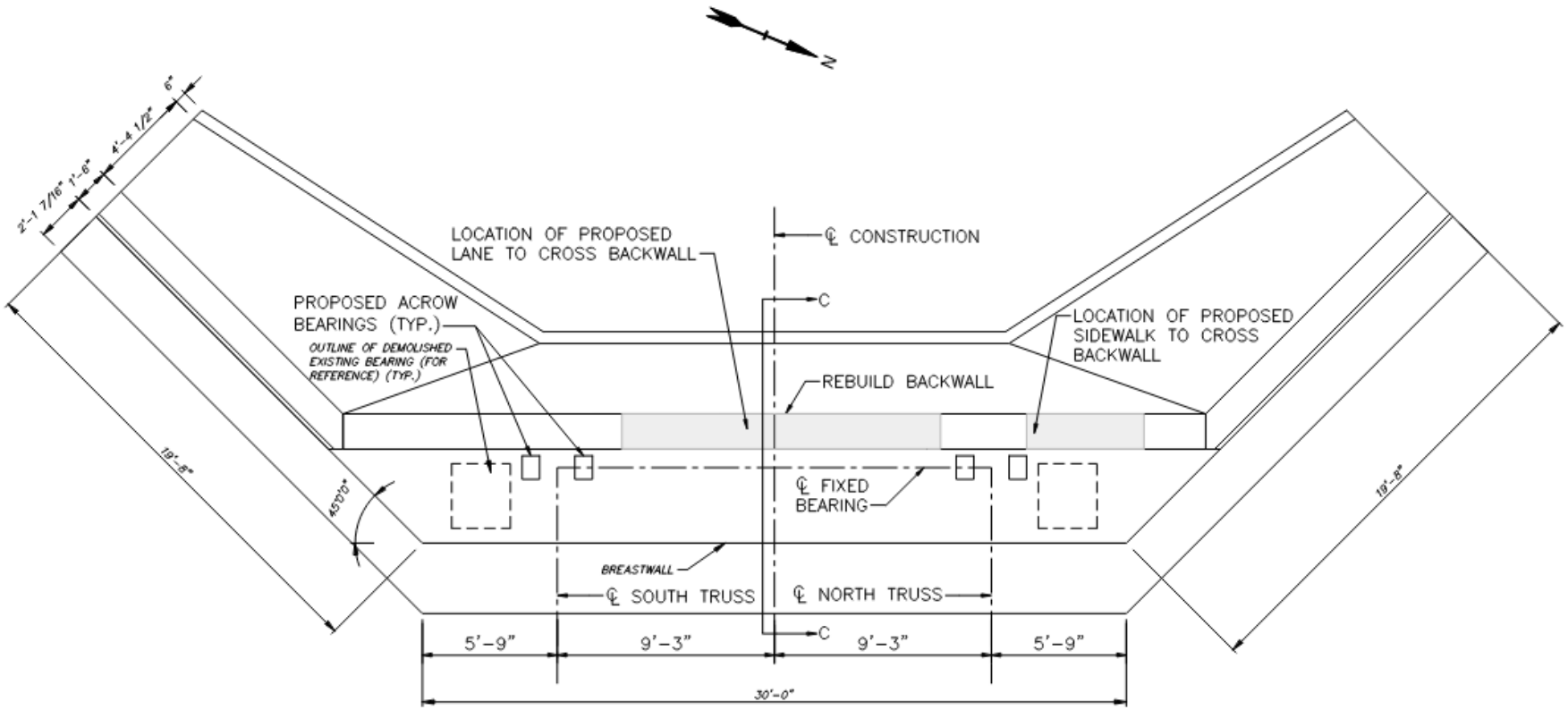

PROPOSED WEST ABUTMENT PLAN

SCALE: $\frac{1}{4}$" = 1'-0"

PRELIMINARY ABUTMENT LAYOUT:

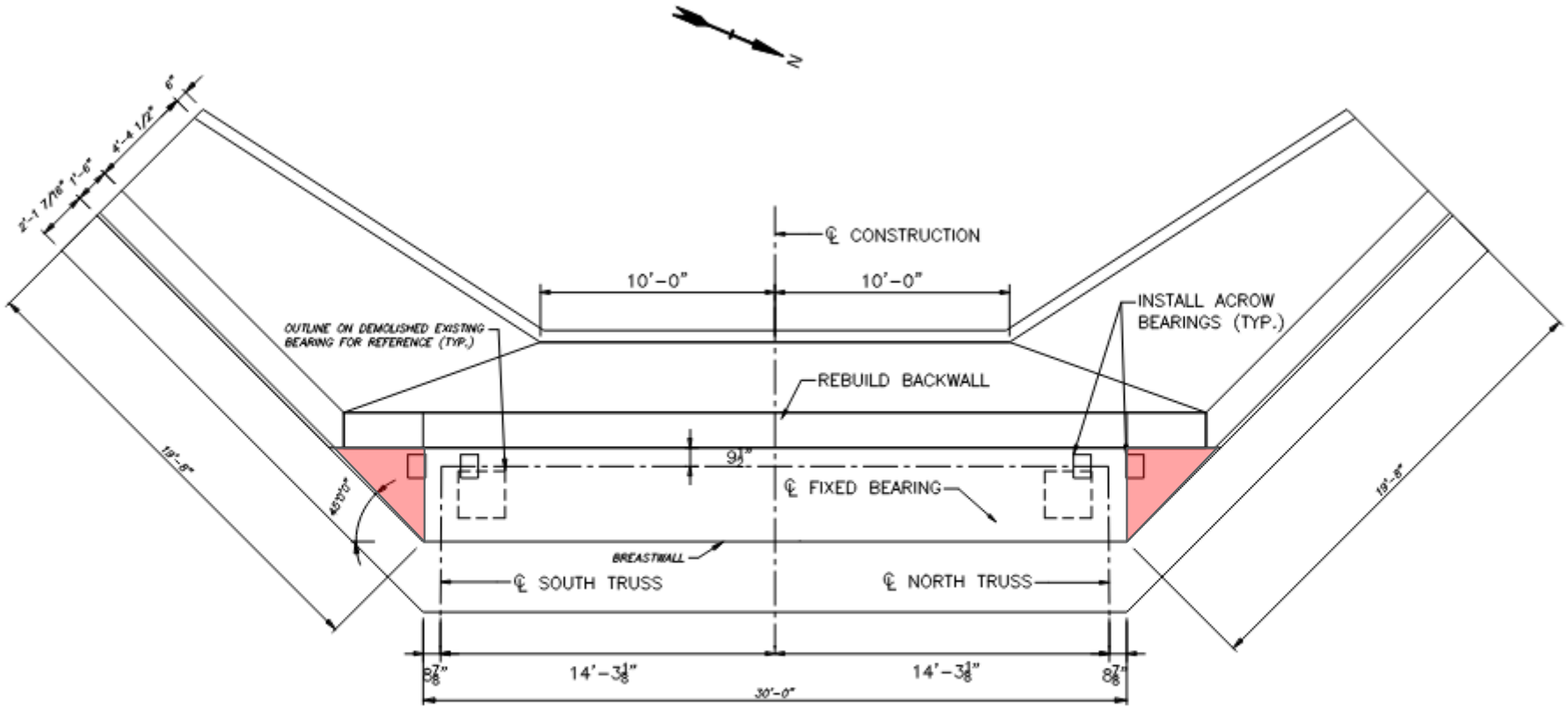

2 LANE WEST ABUTMENT PLAN

SCALE: ¼" = 1'-0"

PRELIMINARY ABUTMENT SECTION:

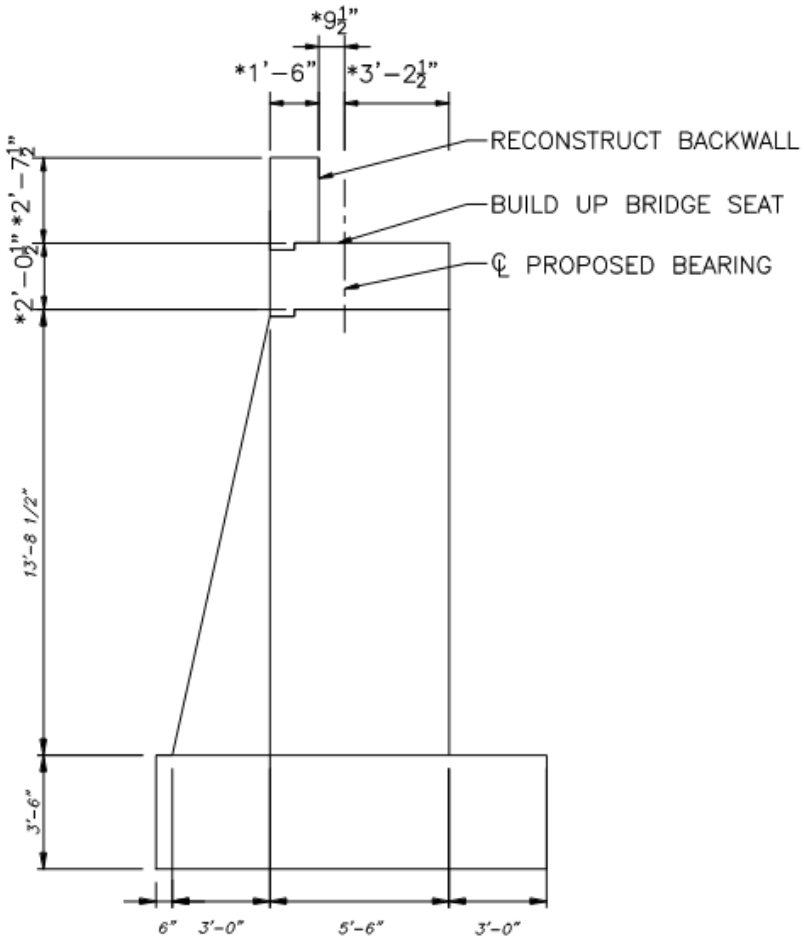

SEC C-C PROPOSED WEST ABUTMENT

SCALE: ¼" = 1'-0"

PRELIMINARY BRIDGE LAYOUT:

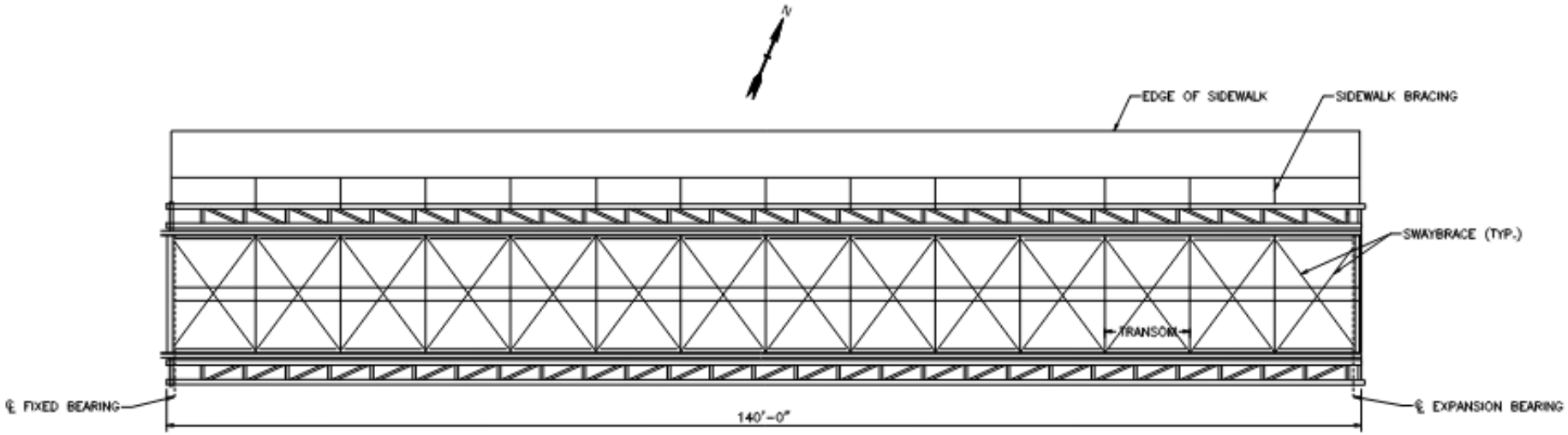

PROPOSED SUPERSTRUCTURE FRAMING PLAN

SCALE: 1/16" = 1'-0"

PRELIMINARY BRIDGE SECTION:

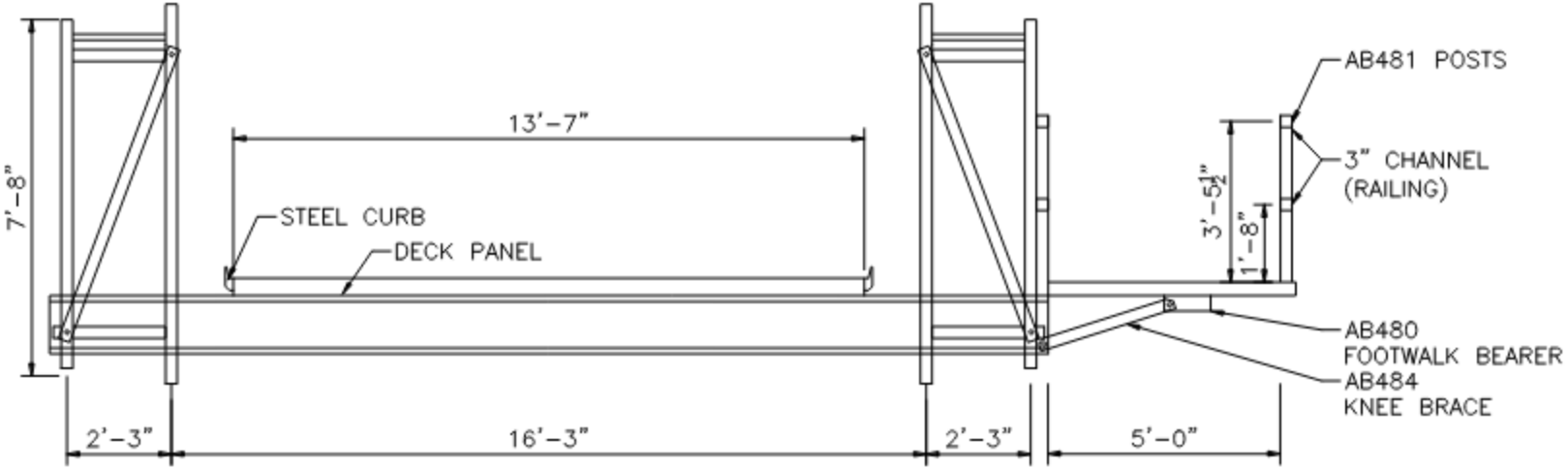

PROPOSED SUPERSTRUCTURE CROSS SECTION

SCALE: ⅜" = 1'-0"

QUESTIONS?